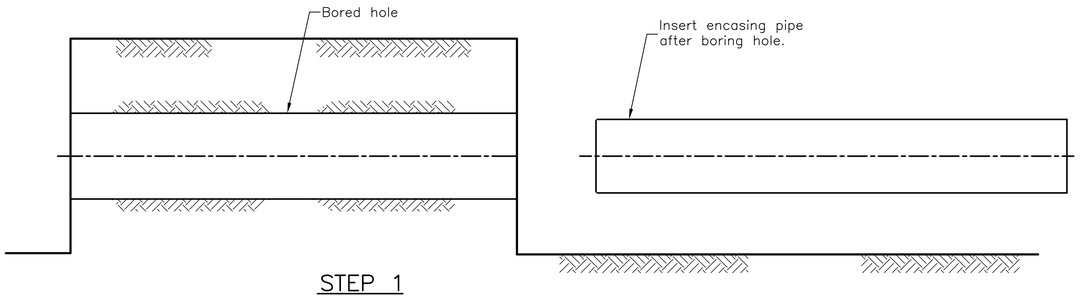

STEP 1

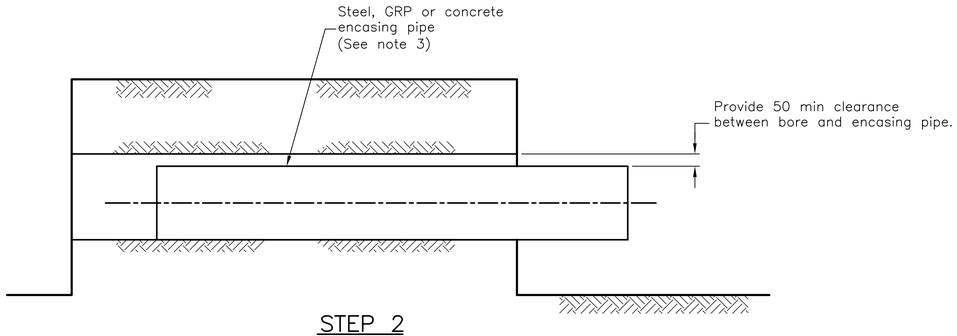

STEP 2

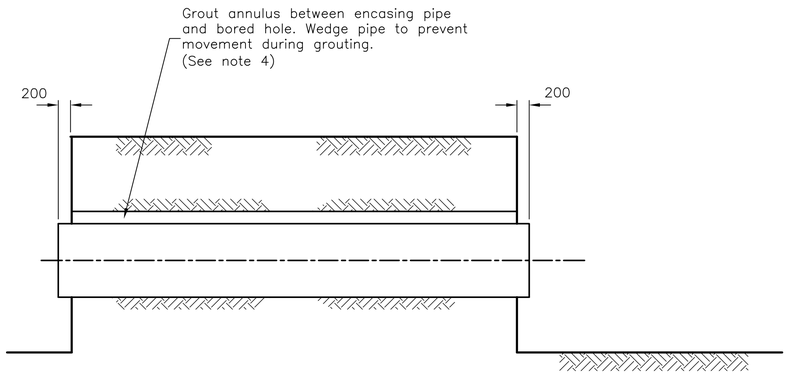

STEP 3

INSTALLATION OF BORED ENCASING PIPE

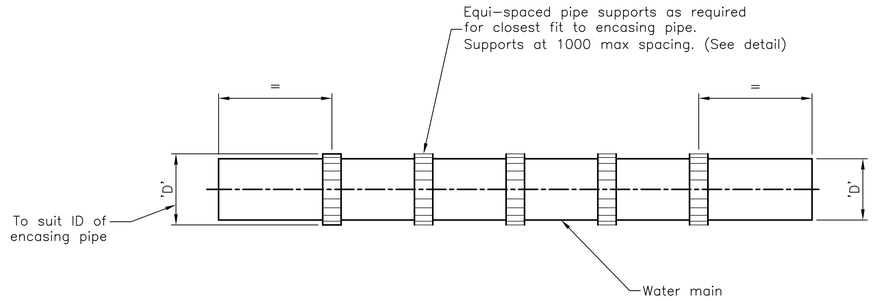

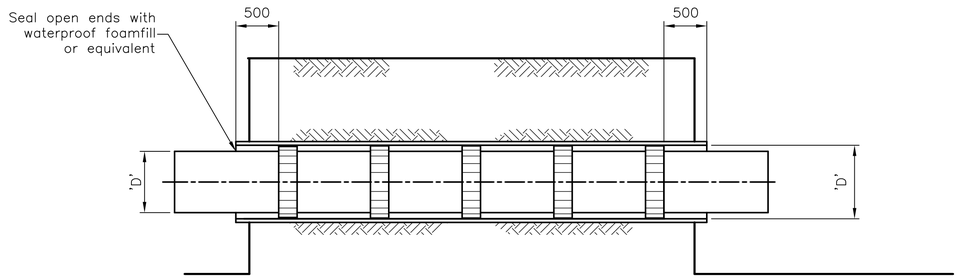

TYPICAL FINISHED INSTALLATION

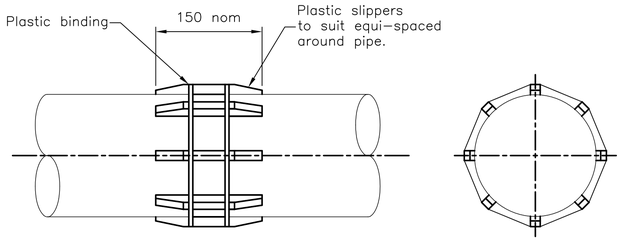

WATER MAIN SUPPORTS DETAIL

BORED ENCASING PIPE SYSTEM

Steps 1, 2 & 3 as shown.

JACKED ENCASING PIPE SYSTEM

Installation of jacked encasing pipe to be carried out by specialist pipe jacking company authorised by the water agency.

NOTES

1. All dimensions in millimetres.
2. Pipe materials and 'D' & 'D' to be as specified in design drawing.
3. Full butt weld steel encasing pipes welded.
4. Grouting mix to be 1:1 (sand:cement) with a water : cement ratio 1:0.67 by weight using fine well rounded sand. Plasticisers may be used.

No.	DATE	DESCRIPTION	AP'D
A		ORIGINAL ISSUE	

REVISIONS

NOTES : BASED ON FORMER WSAA DRAWING WAT-1214

Full Size A1

Not to Scale

DRAWN:

CHECKED: D Moseley

Design Engineer Approved: P Turl

Date: 24-07-2012

Manager Approved: M Harvey

Date: 24-07-2012

City of Townsville

Ph: (07) 4727 9000
www.townsville.qld.gov.au

BURIED CROSSINGS
BORED & JACKED ENCASING PIPE DETAILS

STANDARD DRAWING

WATER

SD-376 | A