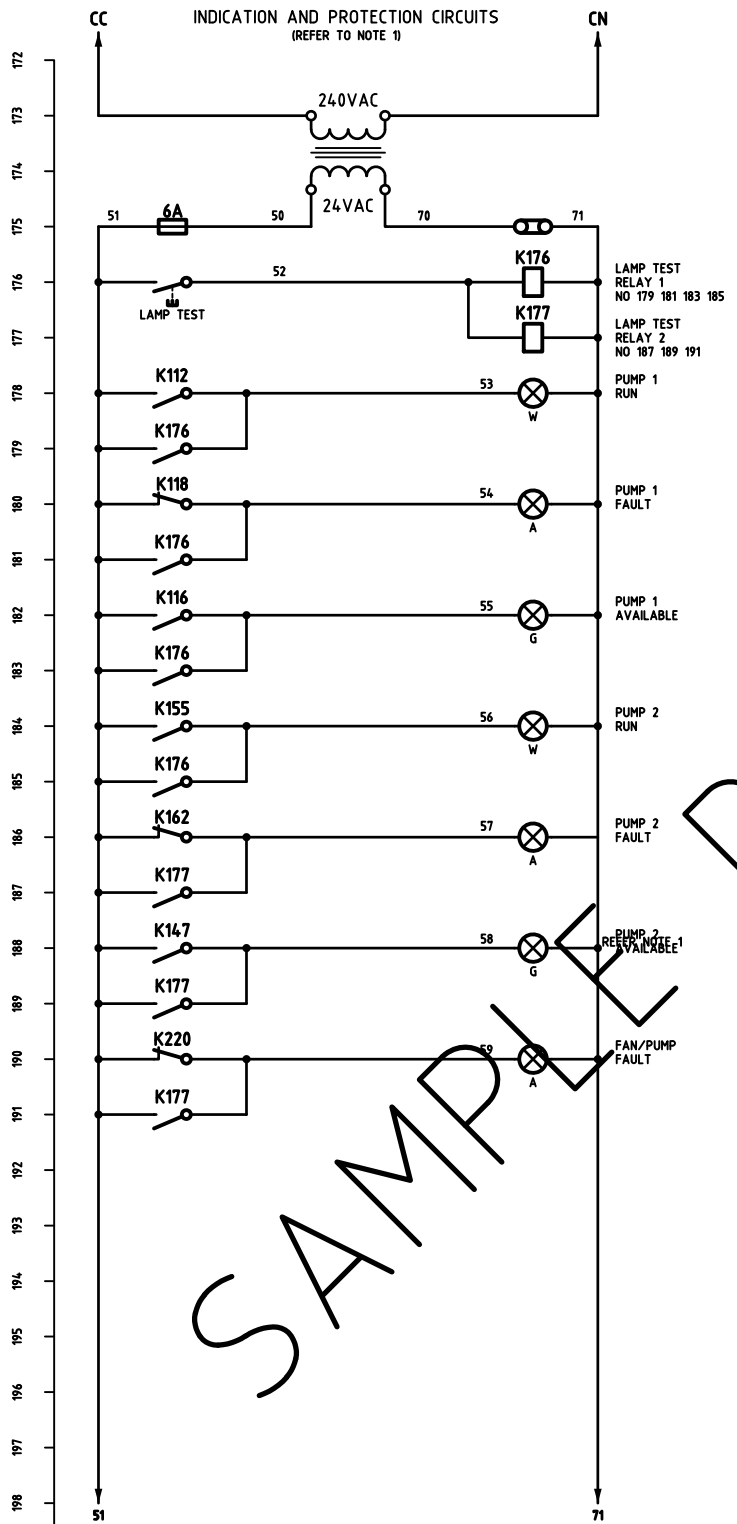

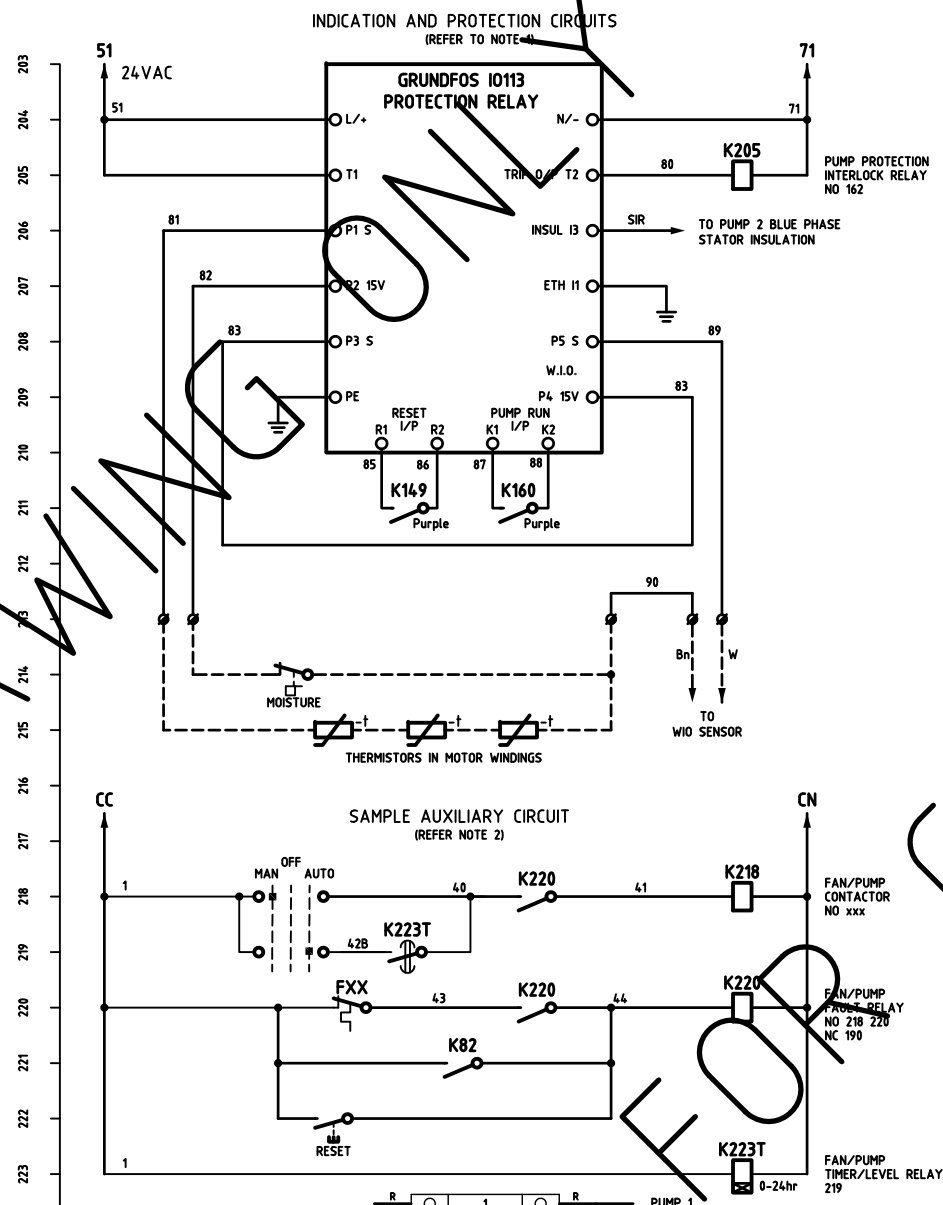

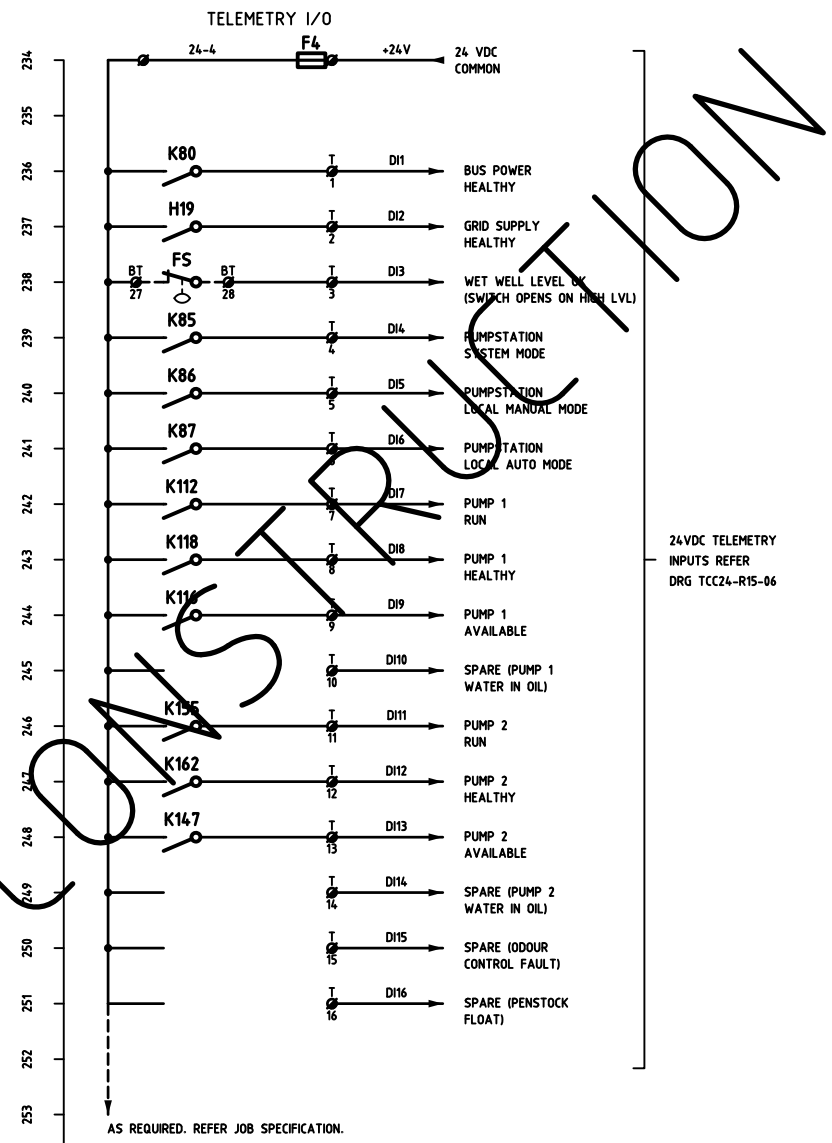

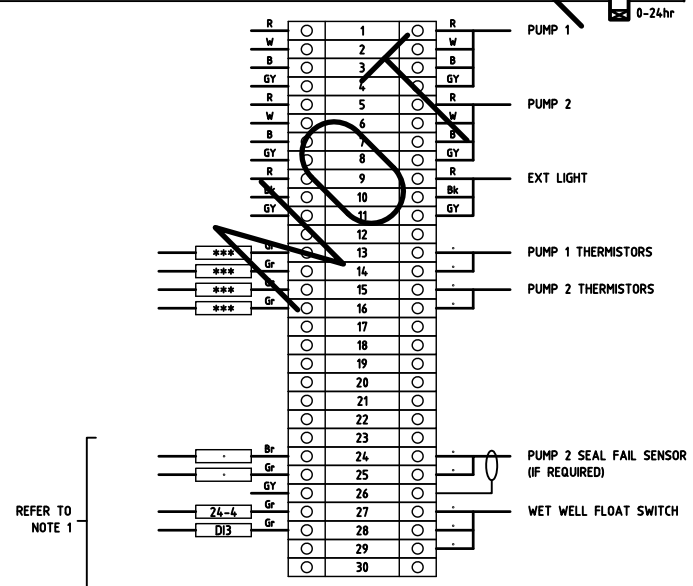

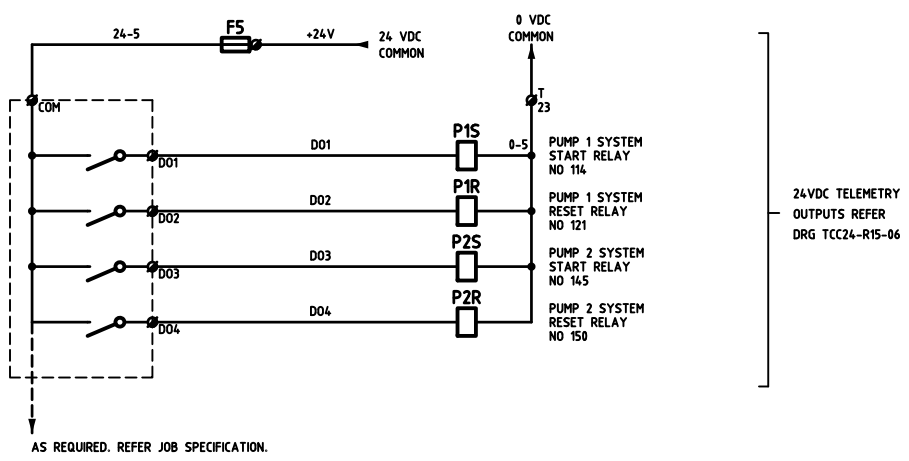

NOTE 1

PUMP/MOTOR PROTECTION REQUIREMENTS TO BE VERIFIED PRIOR TO CONSTRUCTION. GRUNDFOS IO113 ARE TYPICALLY USED FOR DRY WELL GRUNDFOS PUMPS GREATER THAN 17kW. REFER JOB SPECIFICATION. ALL PROTECTION CIRCUITS ARE TO OPERATE AS FAIL SAFE.

NOTE 2

REFER JOB SPECIFICATION FOR DETAILS OF AUXILIARY CIRCUITS.

COLOUR	ABBREV	FUNCTION
RED	R	LV ACTIVE
BLACK	Bk	LV NEUTRAL
PURPLE	P	24V+
ORANGE	O	24V-
GREY	Gr	ELV CONTROL
WHITE	W	LV CONTROL
GREEN/YELLOW	G/Y	EARTH

DRAWING ONLY
SAMPLE
NOT FOR CONSTRUCTION

ASSOCIATED DRAWINGS

TCC24-R15-03
TCC24-R15-04
TCC24-R15-06

NOTES

THIS DRAWING IS TO BE READ IN CONJUNCTION WITH STANDARD SPECIFICATION TCC24, THE JOB SPECIFICATION AND ANY DIRECTIONS FROM THE SUPERINTENDENT.

THIS IS A TYPICAL STANDARD DRAWING ONLY AND IS NOT INTENDED FOR CONSTRUCTION.

DESIGNED
DRAWN RXS TCC 20.10.21
VERIFIED
APPROVED

LETTER	DETAILS OF AMENDMENT	APP'D	DATE
0	REDRAWN FROM TCC24-R14-05 WITH MINOR MODIFICATIONS	RXS	20.10.21

COPYRIGHT
THIS DESIGN IS NOT TO BE COPIED OR AMENDED WITHOUT WRITTEN PERMISSION FROM TCC

City of Townsville

THIS DRAWING SUPERSEDES TCC24-R14-05
RECOMMENDED
ACCEPTED

STANDARD SPECIFICATION TCC24 ELECTRICAL SCHEMATIC FOR TYPICAL WASTEWATER PUMP STATION

CONTROL CIRCUIT CONTINUED

A1 | PROJ No. | DRAWING STATUS: ISSUED

DRAWING No. TCC24-R15-05
ISSUE 0
SHEET No. 2 OF 2

SWA-EXT AUG 2014